mgi®

TOOLS

www.mgitools.it

Ø16 x 22 – Z3
Part of the MGI
mid shear (30°)
PCD tooling program

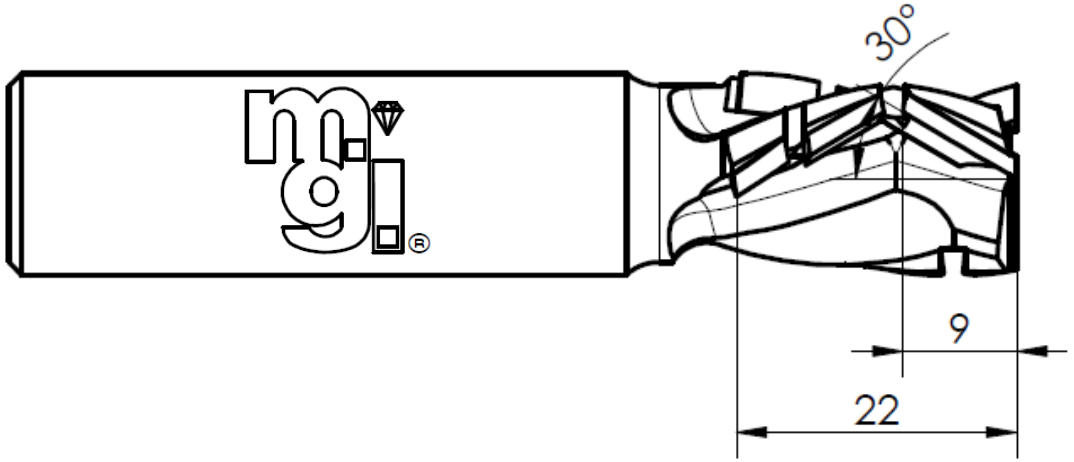

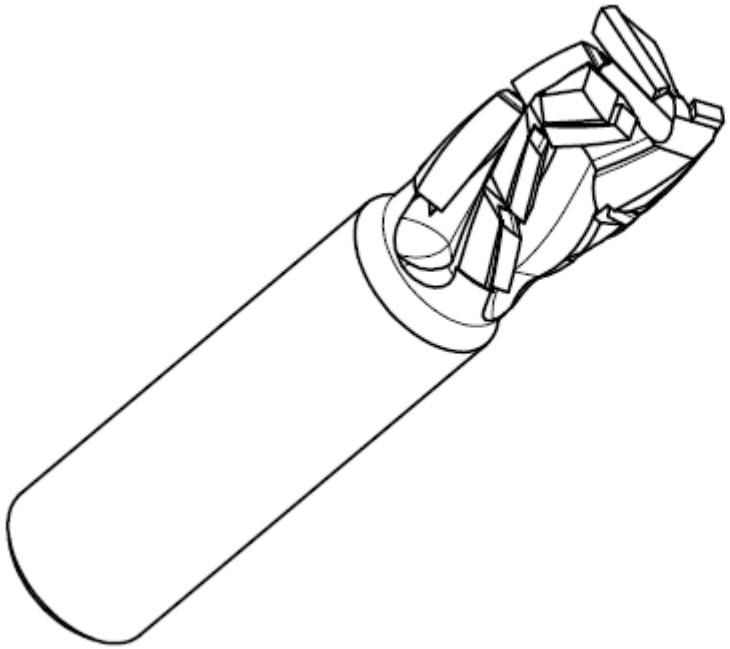

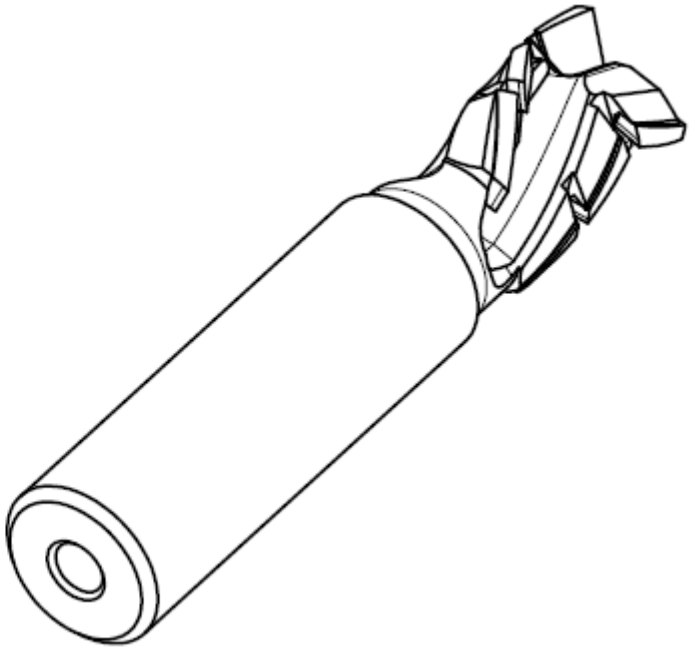

www.mgitools.it

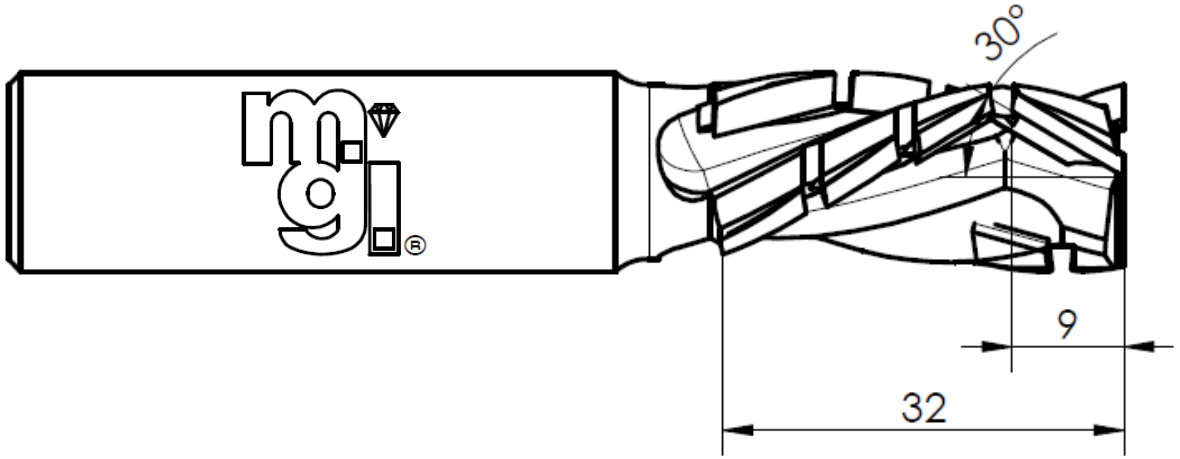

Ø16 x 32 – Z3
Part of the MGI
mid shear (30°)
PCD tooling program

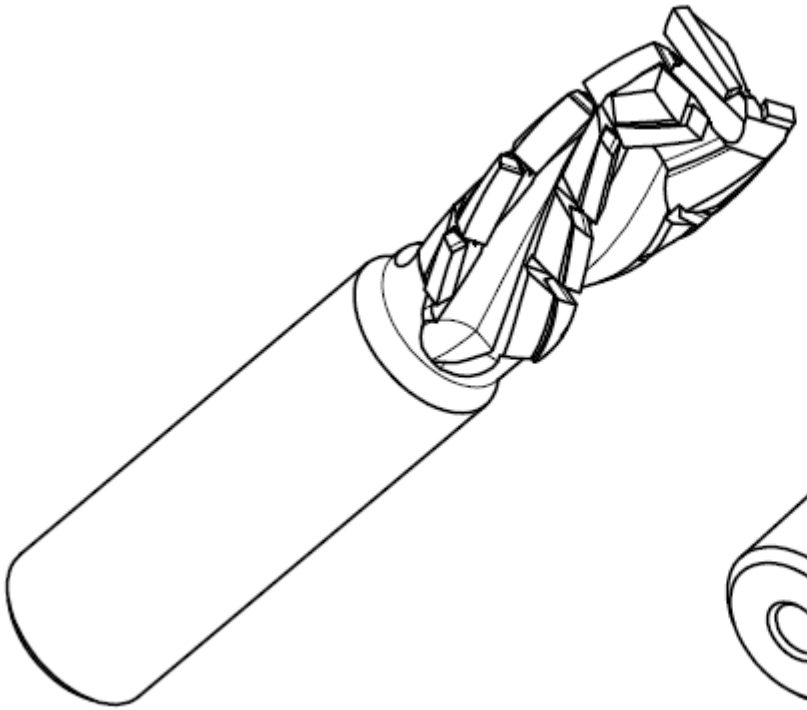

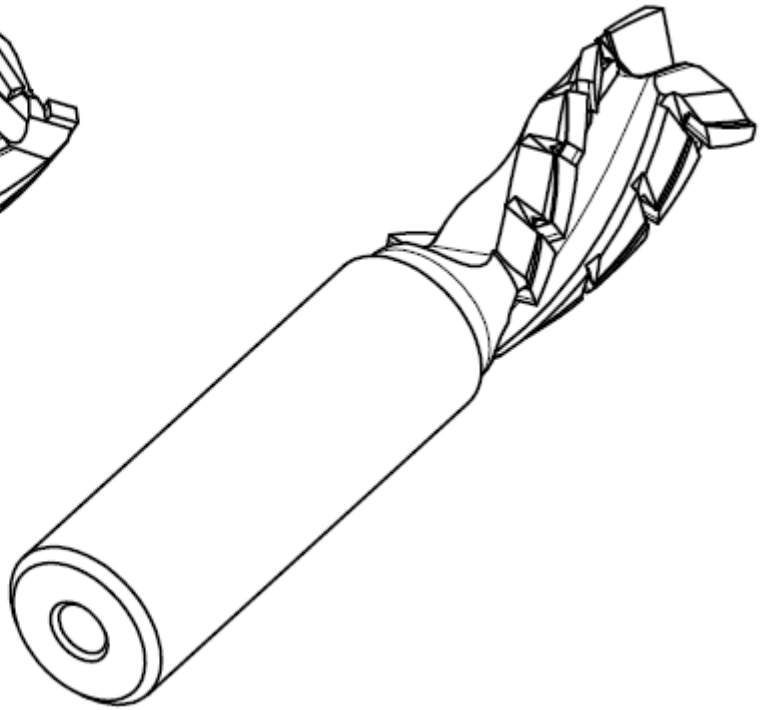

www.mgitools.it

Ø16 x 45 – Z3
Part of the MGI
mid shear (30°)
PCD tooling program

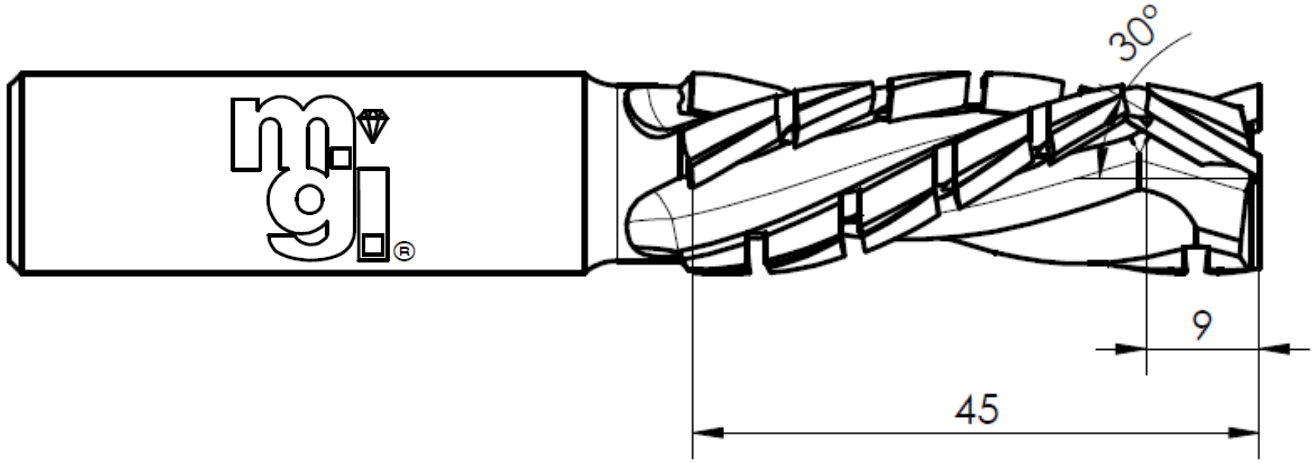

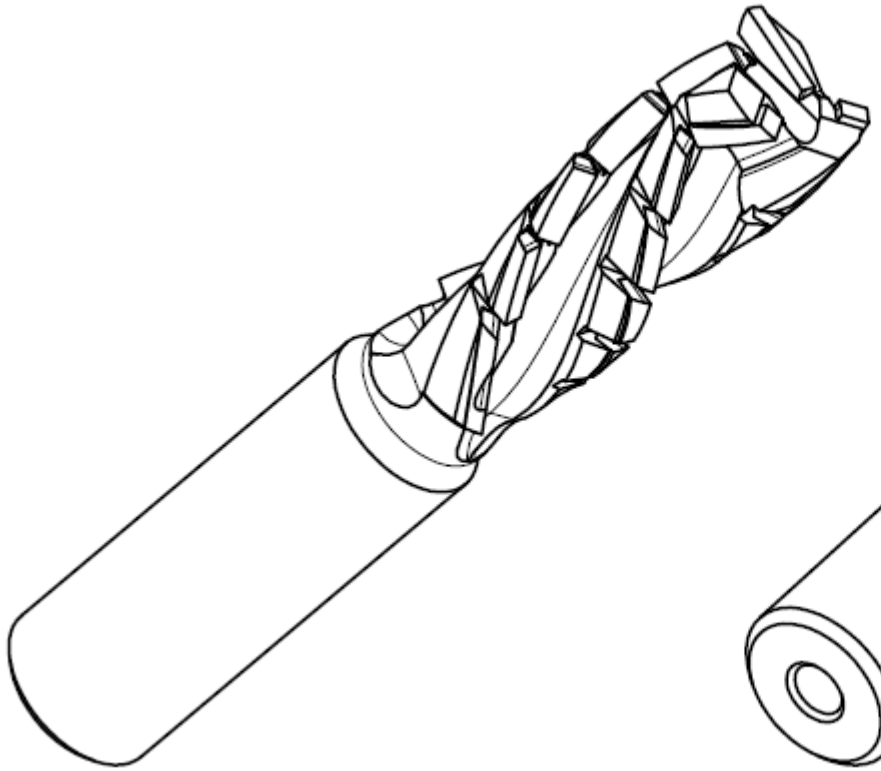

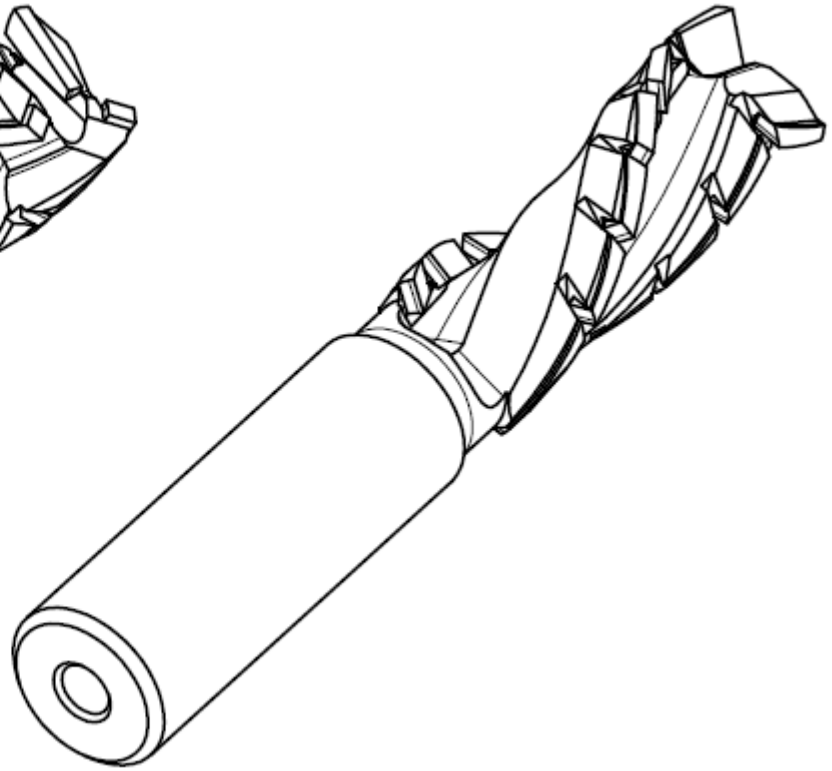

www.mgitools.it

Parameters:

Edge routing removing 3mm
18.000 RPM
18m/min
Chip-load = 0,33

Full dividing cut
18.000 RPM
14m/min
Chip-load = 0,26

www.mgitools.it

Balance class:
G2.5 @ 24.000 RPM

Tool-holder:
Thermo-Grip – HSK63F / d16

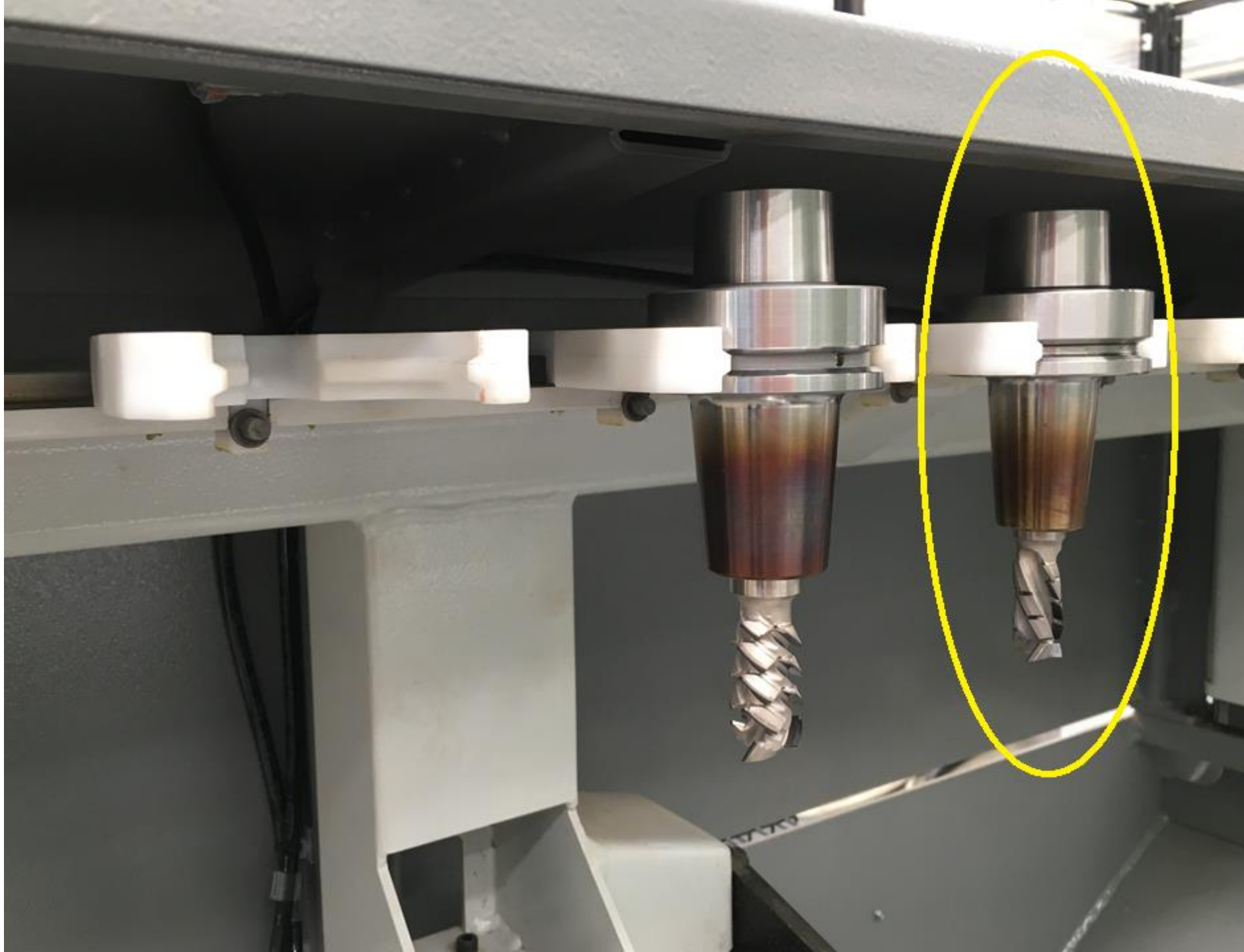

www.mgitools.it

Results on the material:
EDGES

Single pass:
Sharp edges, compact core

Melamine faced chipboard
Thickness 25mm

www.mgitools.it

Potential for faster cycles:
EDGE TRIMMING
20.000 RPM at 20m/min
22.000 RPM at 22m/min
24.000 RPM at 24m/min

For 25mm thick MFC reduce feed by 20% for dividing cuts

Melamine faced chipboard
Thickness 25mm

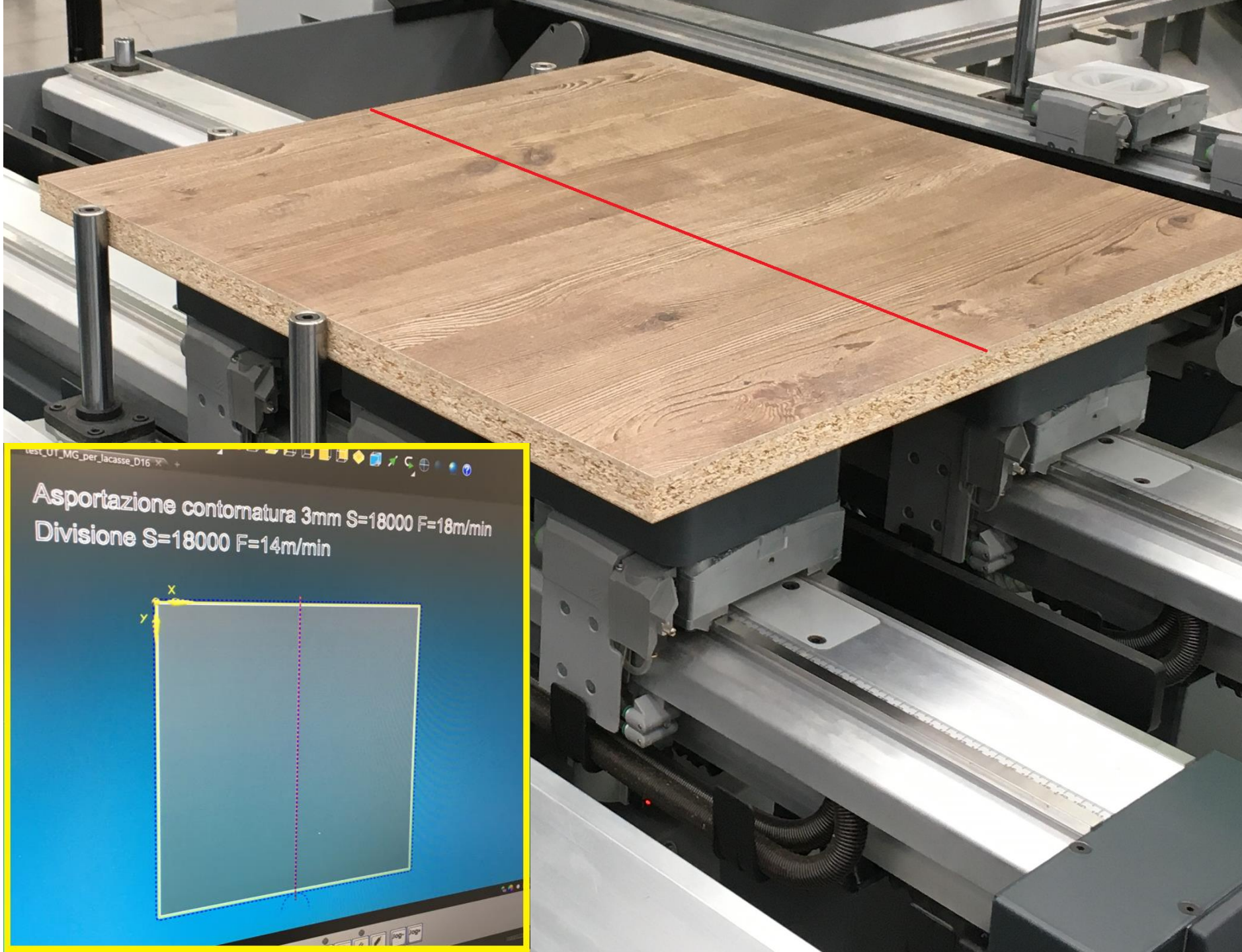

www.mgitools.it

PCD, Dense grade

Tollerance +-0,01

Best use:
Dividing cuts & roughing cycles at high feed speeds

www.mgitools.it

mgi® TOOLS

Best use:
Dividing cuts & roughing cycles at high feed speeds
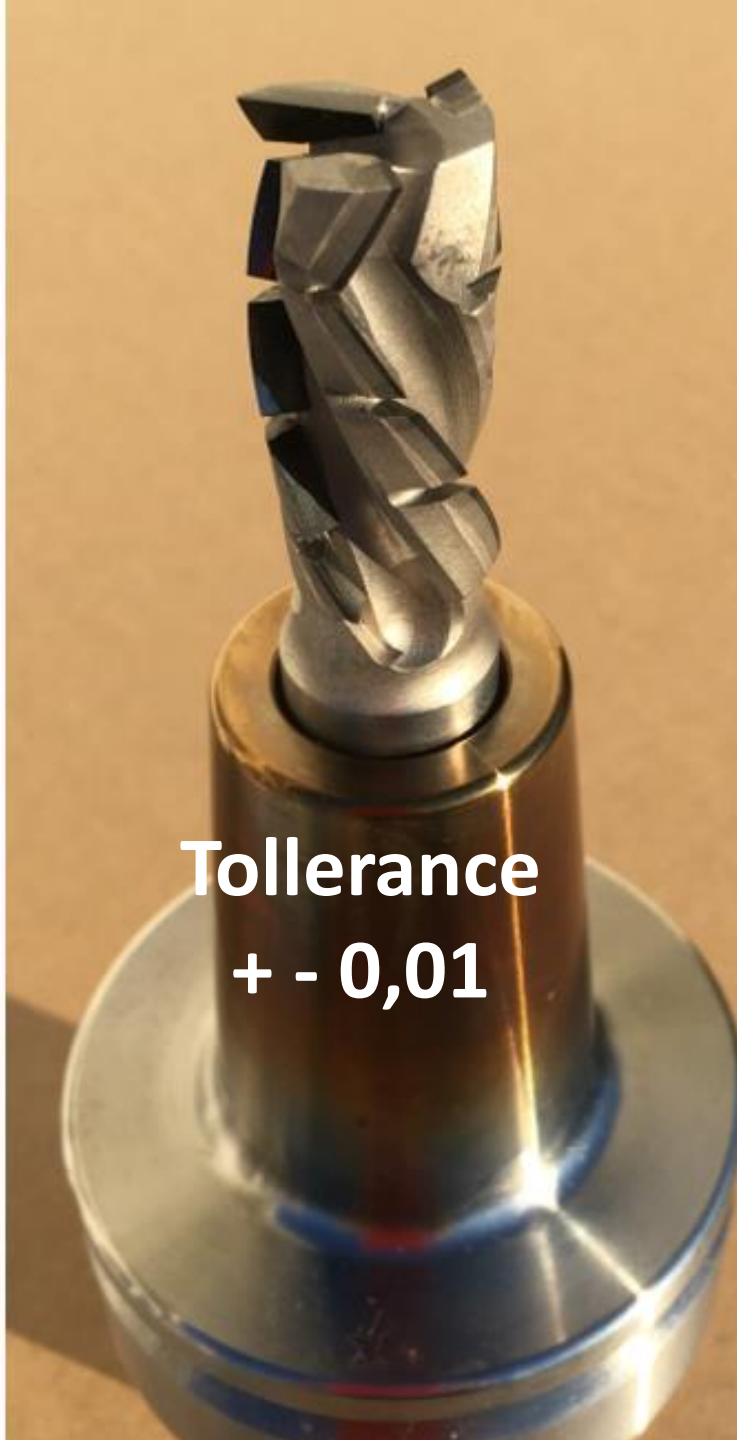
www.mgitools.it